BOSS CE-3 SERVICE NOTES

First Edition

SPECIFICATIONS

Power	9V DC (Battery or AC adaptor)
Power Consumption	13mA at 9V
S/N Ratio	better than 90dB (IHF-A)
Maximum Output Level	0dBm (100Hz), −10dBm (1kHz)
Input Impedance	1MΩ (FET input)
Output Load Impedance	over 10kΩ
Dimensions	70(W)x55(H)x125(D)mm (2-3/4"x2-1/4"x5")
Weight	400g (14 oz.)

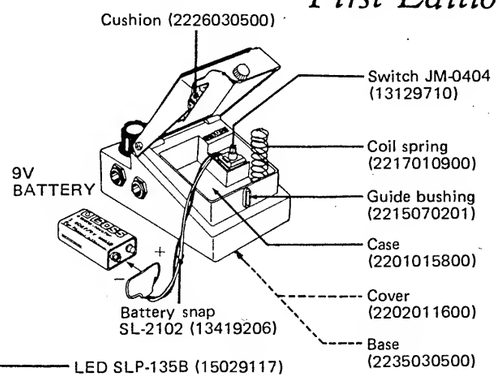

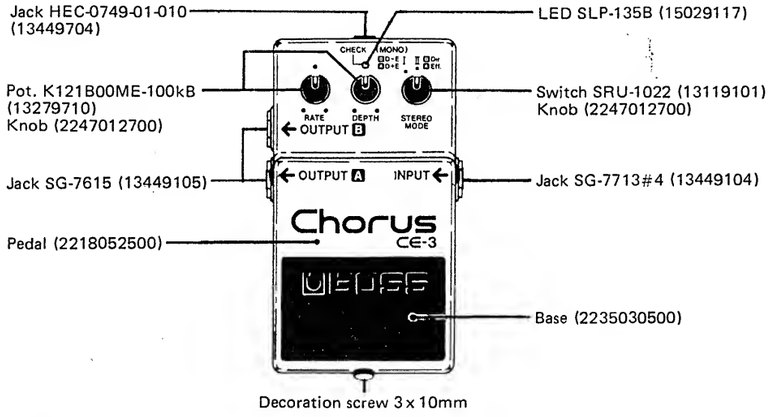

Decoration screw 3x10mm

PARTS LIST

2201015800	Case	light blue metallic
2218052500	Pedal	light blue metallic
2202011600	Cover	bottom
2235030500	Base	bottom
2235030400	Base	pedal matt
2215070201	Guide bushing	
2216050200	Spacer	pcb-bottom cover
2217010900	Coil spring	
2226030500	Cushion	
2247012700	Knob	
13419206	Battery snap SL-2102	

+9/17 変更 ← 2226033300

JACK

13449104	SG-7713#4	INPUT
13449105	SG-7615	OUTPUT
13449704	HEC-0749-01-010	adaptor

SWITCH

13129710	JM-0404	key
13119101	SRU-1022	rotary

POTENTIOMETER

13279710	K121B00ME-100kB	RATE, DEPTH
13229140	H0651A-10kB	trimmer

PCB

7522251001	Ass'y ET5222-510	(pcb 2291055200)
	LED mounting	(pcb 2291049600)

IC

15189102	NJM4558DD	op amp
15189115	TL022CP	op amp
15219211	MN3207	BBD
15219210	MN3102	BBD driver

TRANSISTOR

15129104	2SC732TM-GR	
15129108	2SC945-P	
15139101	2SK30ATM-Y	FET

DIODE

15019125	1SS133	
15019209T0	S5500G	
15019526	RD5.6EB-3	zener
15029117	SLP-135B	LED

LED.PCB
旧 2291049800 + ポリカパイプ + LED
SN28730089 新 2291057800 + TR-2 + LED
12064308

Roland

ET5222-510 (7522251001) (pcb 2291055200)

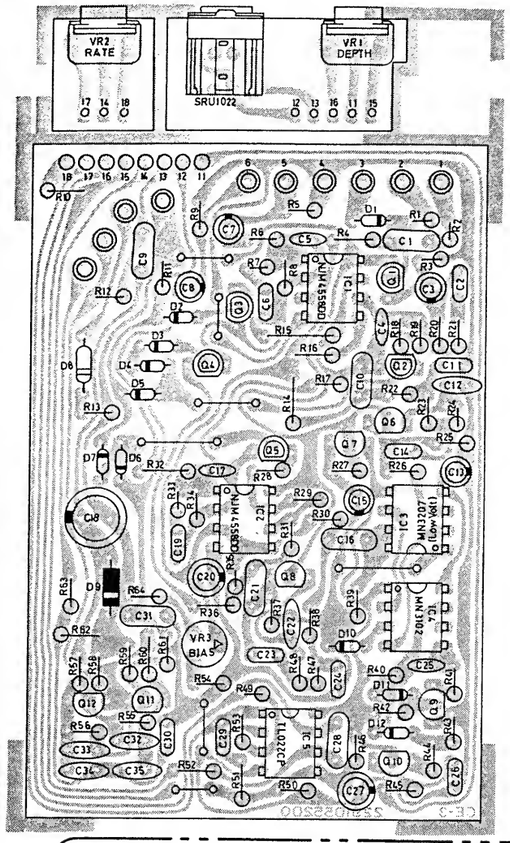

ADJUSTMENT

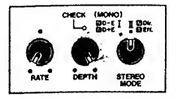

Set controls as shown left. Feed a signal 200Hz, +2dBm, sine into INPUT jack.
Connect an oscilloscope to Q8 emitter.
Determine the BBD bias by turning VR-3 to provide a centered operating-point.

WAVEFORMS

Input signal 200mVp-p 200Hz

IC1 pin 7	1.0Vp-p
Q6 Emitter	0.7Vp-p
IC5 pin 7	5.5V, 4Vp-p, 1.5V RATE MIN .... 3sec ±20% RATE MAX ... 270msec ±20%

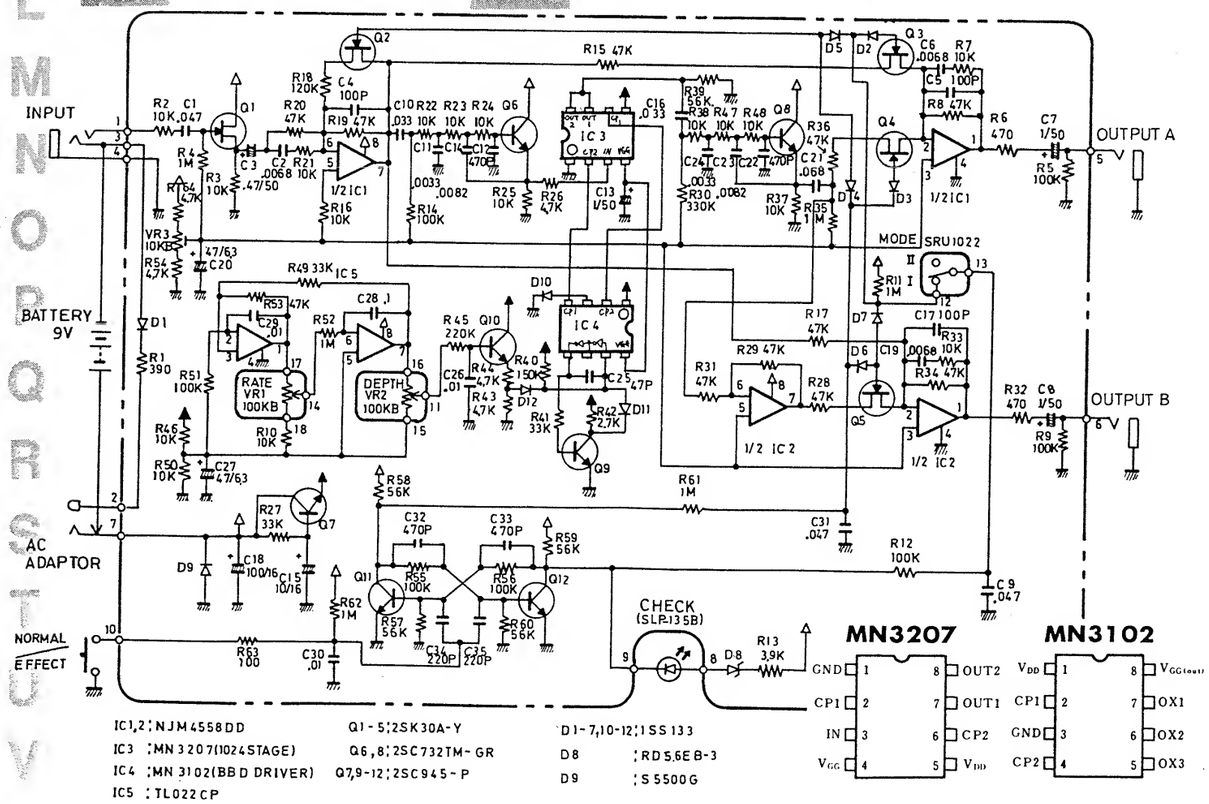

IC1,2 : NJM4558DD
IC3 : MN3207(1024STAGE)
IC4 : MN3102(BBD DRIVER)
IC5 : TL022CP
Q1-5 : 2SK30A-Y
Q6,8 : 2SC732TM-GR
Q7,9-12 : 2SC945-P
D1-7,10-12 : 1SS133
D8 : RD5.6EB-3
D9 : S5500G